The Schwarzschild solution and the event horizon of black holes

Magnus

March 2026

Abstract

Schwarzschild solution was the first solution to Einstein's field equations. The equation describes the geometry of spacetime around spherically symmetric masses, for example, near black holes. This task accounts for the Schwarzschild solution and mathematically derives the Schwarzschild radius, which defines the event horizon. It analyzes the physical consequences and effects near a black hole, such as gravitational time dilation and spaghettification, and it discusses the singularities and limitations of the Schwarzschild solution. Through the use of observational data from stellar orbits around the center of the Milky Way, the mass of Sagittarius A* is determined to be approximately $M_{SgrA*} \approx 4.05 \cdot 10^6 M_\odot$. The paper shows how the Schwarzschild solution is used to transition between theoretical physics and astronomical observations, thereby confirming the existence of black holes and their effect on spacetime.

Contents

1 Introduction **5**

2 Explanation of the Schwarzschild metric and black holes **7**

3 Mathematical derivation and physical analysis **12**
3.1 Derivation of the Schwarzschild solution 12
3.2 Derivation of the Schwarzschild Radius 18
3.3 Gravitational time dilation 20
3.4 Spaghettification 21
3.5 Determination of the mass of Sagittarius A* 22

4 Assessment and Discussion **25**
4.1 Assessment of the Schwarzschild Solution and the Mass of Sgr A* . 25
4.2 Discussion 26

5 Conclusion **29**

1 Introduction

General relativity represents our most fundamental understanding of the universe, including time, space, and gravitation. [1] At its core, the theory is a geometric description of gravity, where space and time together form what is called spacetime. It was developed by the physicist Albert Einstein in the period between 1907 and 1915, [2] after which the final version was published in 1916. Instead of describing gravitation as a traditional force between bodies, the theory describes it as a geometric property of spacetime. [3] The theory was developed as an extension of special relativity, which Einstein published in 1905. [4] While special relativity primarily describes physics in inertial frames without gravitation, the general theory makes it possible to include accelerations and gravitational fields by describing gravitation as a curvature of the geometry of spacetime itself. [5] A central element of general relativity is the concept of spacetime, where the three spatial dimensions and time are combined into a geometric system. According to the theory, energy and mass create a curvature in spacetime. This curvature determines how objects move, and it is this effect we perceive as gravitation. The greater the mass an object has, the more curvature there is in the spacetime around the object. For ordinary celestial bodies such as planets and stars, this curvature is relatively moderate, but if a very large mass is concentrated in a very small area, the curvature can become extreme. In such a case where the curvature becomes so extreme, the gravitational field will be so strong that light, for example, cannot escape the object's attraction. Such an object is called a black hole. [6] Shortly after the publication of general relativity, the German physicist Karl Schwarzschild found the first exact solution to Einstein's field equations, which describes precisely the curvature around a static, spherically symmetric mass. This solution is called the Schwarzschild solution and is today important for understanding black holes, as it defines the critical boundary also called the Schwarzschild radius. [7] This radius marks the event horizon, which is the point where the escape velocity exceeds the speed of light, and where time is affected so extremely that, for a distant observer, it appears to stand still. This task will investigate how the Schwarzschild solution mathematically describes the event horizon and the physical consequences of approaching it. [8] Through a mathematical derivation of the Schwarzschild radius,

[1] (Wald, 1984) p. 3
[2] (Einstein, 1916) - front page
[3] Ibid p. 2
[4] (Hamilton A. J., 2021) p. 11
[5] (Pedersen, 2008) p. 4
[6] (Schwarzschild, 1916)
[7] (Pedersen, 2008) pp. 57-58
[8] (Hamilton A. J., 2021) p. 137

it will be shown how gravity affects both time and physical objects, including the phenomenon of "spaghettification." The theory will be used to determine the mass of the supermassive black hole, Sagittarius A*, at the center of our own galaxy based on observations of stellar orbits.

2 Explanation of the Schwarzschild metric and black holes

[9] Black holes were already theorized before Einstein's general theory of relativity [10] (hereafter GR). Through work with Newtonian mechanics, several physicists established theories about a gravitational force so powerful that even objects moving at the speed of light would not be able to escape. [11] It was only when Einstein released his GR and field equation that black holes emerged as a real solution. In the new equation, gravity is not a force that pulls on you, but a curvature of the path on which you move. To maintain causality (cause and effect) and special relativity, all possible movements in spacetime are divided into three categories, determined by the metric: timelike curves, which describe paths for particles with mass. These always move slower than light ($v < c$). Null curves (lightlike) describe paths for particles without mass (e.g., photons). These always move at the speed of light ($v = c$), and then there are the spacelike curves which describe a distance between two points that cannot be causally connected. No physical object can move along a spacelike curve, as it would require a speed exceeding the speed of light ($v > c$). This division is crucial for the definition of a black hole. Outside the hole, one can move in all directions in space. However, when the event horizon is passed, the geometry of spacetime changes radically, where all directions pointing out of the hole become spacelike directions. Since neither light nor mass can follow a spacelike curve, it is geometrically impossible to escape, and all possible timelike and lightlike paths (the future of particles) inevitably point toward the singularity. [12] The field equation can be derived from a variation principle. First, the Einstein-Hilbert action is defined, which primarily depends on the curvature. [13] By requiring that the variation of this action is zero ($\delta I = 0$), one mathematically derives Einstein's field equations. It is these equations that dictate how matter and energy curve spacetime.[14] Einstein-Hilbert action:

$$I\left[g_{\mu v}\right] \sim \int d^4x \cdot \sqrt{-g} \cdot (R - 2 \cdot \Lambda + \ldots)$$

where $\int d^4$ means that you integrate in the 4 dimensions. $\sqrt{-g}$ is the volume element. Because space curves, "volume" is not just $dxdydz$. This factor corrects for the curvature so that we measure the volume correctly (invariant). R (the Ricci scalar) is the most important term. R is a number that indicates how much

[9] (Gustavo E. Romero, 2014) p. 31
[10] I have received a list of acronyms which I will use hereafter. Appendix no. 7
[11] (Daniel Grumiller, 2022) p. 1
[12] (Jordi Gaset, 2022) p. 3
[13] (Tong, 2019) p. 6
[14] (Daniel Grumiller, 2022) p. 4

spacetime curves in a given point. [15] It is the simplest way to describe curvature. Λ (The cosmological constant) is a term that describes energy in the vacuum itself. The EH action mentions "...", which means that one could add more terms with higher-order derivatives (more complex physics), but Einstein-Hilbert (with only R) is the simplest and most important.[16] If you take the EH action and add the action of matter fields, you get

$$I = I_g + I_s = \frac{1}{16\pi G_N} \int_{\mathcal{M}} d^4x \cdot \sqrt{-g} \cdot (R - 2 \cdot \Lambda) + \int_{\mathcal{M}} d^4x \cdot \sqrt{-g} \cdot \mathcal{L}(\Phi_I)$$

[17] Where G_N is Newton's constant, $\mathcal{M}$ is the spacetime manifold, $g = det(g_{\mu v})$, and Φ_I denotes summarizing matter fields. Variations of this action yield Einstein's field equation. When working in geometric units, it means that we set the universal gravitational constant G and the speed of light in vacuum c to 1. [18] This results in the proportionality constant being reduced from $8\pi G_n$ to 8π. It is also assumed that we are working with a local system (e.g., around a black hole) where the cosmological constant $\Lambda = 0$. This implies that spacetime is asymptotically flat and [19] the field equation will appear as

$$R_{\mu v} - \frac{1}{2} g_{\mu v} R = 8\pi T_{\mu v}$$

The first solution to Einstein's field equation describing a black hole was the Schwarzschild solution, also known as the Schwarzschild metric. [20] This solution was the first of Einstein's vacuum equations, where ($R_{\mu v} = 0$). Karl Schwarzschild found his solution in 1915 and published it in 1916.

$$g = -\left(1 - \frac{2M}{r}\right) dt^2 + \left(1 - \frac{2M}{r}\right)^{-1} dr^2 + r^2 d\Omega^2$$

The metric is the form that describes the spacetime around a round hole, and in this case, a black hole. [21] The solution describes black holes, but it should also be mentioned that the Schwarzschild solution (hereafter SL) is the correct exterior solution for all spherically symmetric gravitational sources. [22] The solution or metric is also invariant under time reversal $t \to -t$, as well as time translations

[15] Ibid p. 4
[16] (Daniel Grumiller, 2022) p. 4
[17] (Daniel Grumiller, 2022) p. 4
[18] (Wald, 1984) p. 72
[19] (Tong, 2019) pp. 143-144
[20] (Schwarzschild, 1916)
[21] (Daniel Grumiller, 2022) p. 27
[22] Ibid. p. 28

$t \to t + t_0$ where $t_0 \in \mathbb{R}$ and spherical rotations. All of this can be expressed in Killing vectors and isometries of the metric. A Killing vector is defined such that when we have a vector field $\zeta(n)$, they create isometries if the Lie variation of the metric along them vanishes

$$\mathcal{L}_{\zeta(n)} g_{\mu v} := \zeta^{\lambda}_{(n)} \partial_{\lambda} g_{\mu v} + g_{v\lambda} \partial_{\mu} \zeta^{\lambda}_{(n)} + g_{\mu\lambda} \partial_{v} \zeta^{\lambda}_{(n)} = 0 \Longleftrightarrow \nabla_{\mu} \zeta_{(n)v} + \nabla_{v} \zeta_{(n)\mu} = 0$$

[23] The equation $\nabla_{\mu} \zeta_{(n)v} + \nabla_{v} \zeta_{(n)\mu} = 0$ is the Killing equation. The Schwarzschild isometry is built from four Killing vector fields

$$\zeta_{(0)} = \partial_t, \quad \zeta_{(1)} = \partial_{\phi}, \quad \zeta_{(2)} + i\zeta_{(3)} = e^{i\phi} \left(\partial_{\theta} + i \cdot \cot \left(\theta \partial_{\phi} \right) \right)$$

[24] The total isometry group is $\mathbb{R} \times SO(3)$, which means that SL has time translation symmetry and is spherically symmetric. The Killing vectors also behave differently. The first Killing vector $\zeta_{(0)}$ is timelike for $r > 2G_N M$, becomes null at $r = 2G_N M$, and is spacelike for $r < 2G_N M$. The spherical Killing vector $\zeta_{(i)}$ is spacelike in the entire interval of the coordinates. Once the spacetime geometry has been established via the metric and its isometries, one can describe how matter and light move in this curved space. In GR, particles follow straight lines in the curved space, called geodesics. These paths are found using the Christoffel symbols (connection coefficients) $\Gamma^{\mu}_{\alpha\beta}$. [25] The symbols function as a link between the metric and the curvature and are defined by

$$\Gamma^{\mu}_{\alpha\beta} = \frac{1}{2} g^{\mu\sigma} \left(\partial_{\alpha} g_{\sigma\beta} + \partial_{\beta} g_{\sigma\alpha} - \partial_{\sigma} g_{\alpha\beta} \right)$$

For the Schwarzschild metric, most of these symbols are zero due to its static and diagonal nature. The non-vanishing components, such as Γ^{r}_{tt}, contain the forces that an observer perceives as gravitational acceleration. [26] These symbols enter directly into the geodesic equation, which is the relativistic generalization of Newton's second law

$$\frac{d^2 \gamma^{\mu}}{d\tau^2} + \Gamma^{\mu}_{\alpha\beta} \frac{d\gamma^{\alpha}}{d\tau} \frac{d\gamma^{\beta}}{d\tau} = 0$$

Once the geodesic equation and the forces described by the symbols are established, one can define what a black hole actually is in this context. [27] A black hole should be understood as a region in spacetime. Based on the geodesics, a black hole is the region where curvature is so extreme that all possible paths inevitably point toward the center at $r = 0$. Since no object can move faster than light, and all

[23] Ibid. p. 28
[24] Ibid. p. 28
[25] (Woodhouse, 2007) p. 53
[26] (Daniel Grumiller, 2022) p. 3
[27] (Gustavo E. Romero, 2014) p. 32

lightlike curves in this region point inward, the black hole becomes a closed part of the universe. This means that causality is broken relative to the rest of the universe, as no information or particles can find a geodesic leading out of this region again; thus, the information or particles are lost.

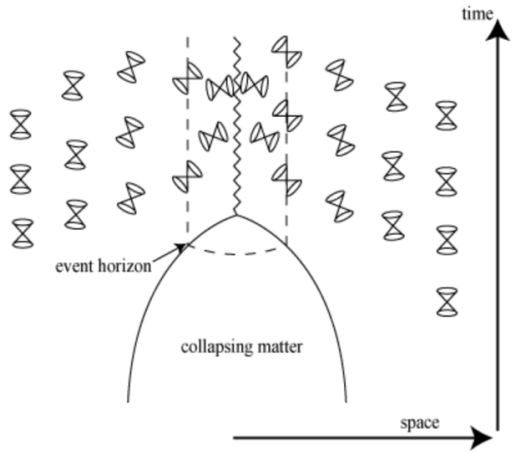

This region is delimited by what is called the event horizon. [28] In SL, this theoretical boundary is found exactly where the radius is $r = 2G_N M$. At this value, something happens in the metric, as the radial component $g_{rr} = \left(1 - \frac{2M}{r}\right)^{-1}$ diverges and goes toward infinity. The horizon can be explained theoretically by looking at how light geodesics behave. Outside the horizon, light cones can point both away from and toward the mass, but the closer one gets to $r = 2M$, the more these light cones tip inward. At the event horizon itself, the curvature is so strong that even the part of the light cone pointing outward is actually only parallel to the horizon. Since the timelike Killing vector $\zeta_{(0)}$ changes from being timelike to being spacelike when crossing $r = 2M$, it means that time and space swap roles. Since a particle must always move forward in time, it is now forced by the geometry to always move inward in radius toward the singularity. The event horizon thus functions as a one-way membrane, where the geodesics tip so much that escaping becomes geometrically impossible, as illustrated in the [29] appendix above. In GR, time is not a universal constant but is affected by the curvature of spacetime. For an observer at rest in Schwarzschild geometry, the relationship between proper time (τ), measured locally, and coordinate time (t), measured by an observer infinitely far away, is given by

$$d\tau = dt\sqrt{1 - \frac{r_S}{r}}$$

[28] (Woodhouse, 2007) p. 123
[29] Appendix no. 1

[30] As a particle approaches the event horizon $r \to r_S$, the factor $\sqrt{1 - \frac{r_S}{r}} \to 0$. This means that for the distant observer, it looks as if time stands still at the horizon. Light emitted near the horizon will also undergo extreme gravitational redshift, as photons must use energy to escape the deep gravitational field, increasing their wavelength. When an object moves close to a black hole, it is also affected by extreme tidal forces. Since the gravitational acceleration g varies with $\frac{1}{r^2}$, the difference in acceleration between two points on an object will be enormous. [31] This effect is called 'tidal stretching' but is also known by the term 'spaghettification'. [32] This effect can be described through geodesic deviation.

$$\frac{D^2\zeta^\mu}{d\tau^2} = R^\mu_{v\rho\sigma} u^v u^\rho \zeta^\sigma$$

[33] The Riemann curvature tensor $R^\mu_{v\rho\sigma}$ contains all information about the curvature of spacetime, while u^v is the object's four-velocity. [34] The Riemann tensor for a black hole grows so violently as the radius r decreases, meaning that the relative acceleration $\frac{D^2\zeta^\mu}{d\tau^2}$ will eventually exceed the electromagnetic forces holding the object's atoms together, whereby the object is inevitably torn apart into a long, thin stream of matter.

[30](Gustavo E. Romero, 2014) p. 38
[31](T. M. Crispim, 2025) p. 1
[32]Ibid p. 4
[33]Ibid p. 4
[34]Ibid p. 4

3 Mathematical derivation and physical analysis

After having established the theoretical framework for how spacetime curves and forms an event horizon, it is now necessary to be able to account for why the geodesics behave so extremely; therefore, we must investigate how the SL is found purely mathematically. [35] It is not enough to state that the metric describes a black hole; therefore, it is necessary to prove that this specific form is the necessary and unique consequence of Einstein's field equations when we require static equilibrium and spherical symmetry.

3.1 Derivation of the Schwarzschild solution

Definition: Static and spherically symmetric spacetime in vacuum

Consider a 4-dimensional Lorentzian manifold describing a static and spherically symmetric spacetime in a vacuum. There exists a timelike Killing vector field that is hypersurface-orthogonal. The isometry group contains a subgroup isomorphic to $SO(3)$. The stress-energy tensor is zero ($T_{\mu v} = 0$), which implies that Einstein's field equations reduce to $R_{\mu v} = 0$.

The metric for this solution assumes the form:

$$g = -\left(1 - \frac{2M}{r}\right) dt^2 + \left(1 - \frac{2M}{r}\right)^{-1} dr^2 + r^2 d\Omega^2$$

[36]First, the form of the metric is constructed. The Schwarzschild metric is a solution to Einstein's field equation:

$$R_{\mu v} - \frac{1}{2} g_{\mu v} R = 8\pi T_{\mu v}$$

For a static and spherically symmetric spacetime in a vacuum. It describes the gravitational field of the exterior of a round object that does not change in time. The goal will be to find all 10 independent metric components $g_{\mu v}$.

$$g = \sum_{\mu,v=0}^{3} g_{\mu v} dx^{\mu} dx^{v}$$

[35](Wald, 1984) p. 119
[36]Ibid

Definition: Static spacetime

A spacetime is called static if there exists a group of isometries, ϕ_t, consisting of one parameter whose orbits are timelike curves. And there exists a spacelike hypersurface Σ which is orthogonal to the orbits of the isometries.

There exists a timelike Killing vector field ζ which is hypersurface-orthogonal. A Killing vector field satisfies

$$\nabla_\mu \zeta_v + \nabla_v \zeta_\mu = 0$$

According to Frobenius's theorem, it satisfies

$$\zeta_{[a} \nabla_b \zeta_{c]} = 0$$

where the brackets around the indices $[abc]$ indicate the total antisymmetrization of the tensor $\zeta_a \nabla_b \zeta_c$. [37] These isometries describe the time translation and time reversal symmetry for a static spacetime.[38] The next step is to choose coordinates for the static spacetime. Each point p in Σ lies on a unique orbit of ζ. Therefore, they can be labeled with the parameter t and the other (spatial) coordinates in Σ, which we call x_1, x_2, and x_3. [39] The points p can then be translated along the orbits to another hypersurface Σ_t. Note that Σ_t is still orthogonal to ζ, and the coordinates for p from Σ are preserved along the orbits because the parameter t is independent of the chosen coordinates on Σ. There are thus no cross-terms $dtdx^i$ and the metric takes the form

$$g = -f\left(x^1, x^2, x^3\right) dt^2 + \sum_{i,j=1}^{3} h_{ij}\left(x^1, x^2, x^3\right) dx^i dx^j$$

We also know that the function f takes the form $f = -\zeta_a \zeta^a$

Definition: Spherically symmetric spacetime

A spacetime is called spherically symmetric if its isometric group contains a subgroup that is isomorphic to SO(3). The orbits of this isometry are 2-spheres.

[40] The elements of SO(3) can be interpreted as rotations; therefore, the spacetime is invariant under rotation. Each orbit 2-sphere is a multiple of the unit

[37] (Wald, 1984) p. 119
[38] Ibid
[39] Ibid
[40] (Pedersen, 2008) p. 9

2-sphere. Thus, the orbit 2-sphere can be completely characterized by its total area A. By introducing spherical coordinates (r, θ, ϕ), where the radial coordinate r is defined as

$$r = \left(\frac{A}{4\pi}\right)^{\frac{1}{2}}$$

We get the induced metric on each orbit 2-sphere

$$g = r^2 \left(d\theta^2 + \sin\theta d\phi^2\right) =: r^2 d\Omega^2$$

[41] If a spacetime is both static and spherically symmetric, then the Killing vector field ζ must be orthogonal to the orbit 2-spheres. Thus, ζ is invariant under all rotational symmetries, and the orbit 2-spheres lie entirely within the hypersurface Σ_t. The full coordinates on the spacetime can now be constructed by choosing a sphere in Σ_t and choosing spherical coordinates θ and ϕ on this sphere. These coordinates can be extended to other spheres in Σ_t using geodesic methods. So if $\nabla_a r \neq 0$, we have coordinates (r, θ, ϕ) in Σ_t, and by translating along the Killing vector field ζ, we can finally choose the coordinates (t, r, θ, ϕ). In these coordinates, a metric for a static spherically symmetric spacetime takes the form

$$g = -f(r)dt^2 + h(r)dr^2 + r^2 \left(d\theta^2 + \sin\theta d\phi^2\right)$$

Now one can proceed with the calculation of the Ricci tensor and then the solution of Einstein's vacuum equation. For the exterior of the body, the energy-momentum tensor $T_{\mu v}$ vanishes because there are no matter field terms. Therefore, the Einstein equations in vacuum simplify to

$$R_{\mu v} = 0$$

A straightforward way to find the Ricci curvature tensor is first to calculate all Christoffel symbols $\Gamma^{\rho}_{\mu v}$ for the metric from: $g = -f(r)dt^2 + h(r)dr^2 + r^2 \left(d\theta^2 + \sin\theta d\phi^2\right)$

$$\Gamma^{\rho}_{\mu v} = \frac{1}{2} \sum_{\sigma} \left(g^{-1}\right)^{\rho\sigma} \left(\frac{\partial g_{v\sigma}}{\partial x^{\mu}} + \frac{\partial g_{\mu\sigma}}{\partial x^{v}} - \frac{\partial g_{\mu v}}{\partial x^{\sigma}}\right)$$

[42] This leads to the following nine non-zero independent components.

$\Gamma^t_{tr} = \frac{1}{2} f^{-1} f'$	$\Gamma^{\phi}_{\phi\phi} = \frac{\cos\theta}{\sin\theta}$
$\Gamma^r_{rr} = \frac{1}{2} h^{-1} h'$	$\Gamma^r_{tt} = \frac{1}{2} h^{-1} f'$
$\Gamma^r_{\phi\phi} = -r h^{-1} \sin^2\theta$	$\Gamma^r_{\theta\theta} = -r h^{-1}$

[41] Ibid p. 8

[42] (Wald, 1984) pp. 121-123

$\Gamma^{\theta}_{\theta r} = r^{-1}$	$\Gamma^{\theta}_{\phi\phi} = -\sin\theta\cos\theta$
	$\Gamma^{\phi}_{\phi r} = r^{-1}$

[43] All other non-zero components can be constructed through the symmetric property of the Christoffel symbols, $\Gamma^{\rho}_{\mu v} = \Gamma^{\rho}_{v\mu}$. [44] The Ricci curvature can now be derived from the contraction of the Riemann curvature

$$R_{\mu v} = R^{\alpha}_{\mu\alpha v} = \partial_{\alpha}\Gamma^{\alpha}_{\mu v} - \partial_{v}\Gamma^{\alpha}_{\mu\alpha} + \Gamma^{\beta}_{\mu v}\Gamma^{\alpha}_{\beta\alpha} - \Gamma^{\beta}_{\mu\alpha}\Gamma^{\alpha}_{\beta v}$$

[45] Then we finally get the Ricci curvature tensor components as

$$R_{tt} = \frac{1}{2}h^{-1}f'' - \frac{1}{4}h^{-2}h'f' - \frac{1}{4}(hf)^{-1}\left(f'\right)^2 + (hr)^{-1}f'$$

$$R_{rr} = -\frac{1}{2}f^{-1}f'' + \frac{1}{4}(hf)^{-1}h'f' + \frac{1}{4}f^{-2}\left(f'\right)^2 + (hr)^{-1}h'$$

$$R_{\theta\theta} = 1 - h^{-1} + \frac{1}{2}h^{-2}rh' - \frac{1}{2}(hf)^{-1}rf'$$

[46] Additionally, we have $R_{\phi\phi} = \sin^2\theta R_{\theta\theta}$, and all other components of the Ricci tensor vanish. [47] By setting all components to zero and adding f^{-1} times the equation (the first Ricci curvature tensor component) to h^{-1} times the equation (the second Ricci curvature tensor component), we get

$$\frac{f'}{f} + \frac{h'}{h} = 0$$

Which has the solution

$$f = Kh^{-1}$$

[48] Where K is a constant. To check if the constant has any physical relevance, or if they can be chosen freely as neat numbers, we scale the time coordinate to $t \longrightarrow K^{\frac{1}{2}}t$. The metric then gives

$$g = -Kh^{-1}(r)dt^2 + h(r)dr^2 + r^2d\Omega^2$$

$$= -h^{-1}(r)d\left(K^{\frac{1}{2}}t'\right)^2 + h(r)dr^2 + r^2d\Omega^2$$

[43] Ibid
[44] (Hamilton A. J., 2021) p. 77
[45] (Wald, 1984) p. 123
[46] (Wald, 1984) p. 123
[47] This specific combination of Ricci components R_{tt} and R_{rr} is often utilized to show that $g_{tt} \cdot g_{rr} = -1$ when $K = 1$
[48] (Wald, 1984) p. 123

$$= -h^{-1}(r)dt^{'2} + h(r)dr^2 + r^2 d\Omega^2$$

The constant K can be absorbed into the time coordinate, and we continue with the rescaled time. This corresponds to choosing $K = 1$. Inserting $f = h^{-1}$ into the equation (the third Ricci curvature tensor component) now gives

$$-f^{'}r + 1 - f = 0 \Longleftrightarrow \frac{d}{dr}(rf) = 1$$

A solution to this differential equation is given by

$$f = 1 + \frac{C}{r}$$

Where C is a constant.[49] Thus, the metric that solves Einstein's vacuum equations for a static and spherically symmetric spacetime is

$$g = -\left(1 + \frac{C}{r}\right) dt^2 + \left(1 + \frac{C}{r}\right)^{-1} dr^2 + r^2 d\Omega^2$$

To determine the constant C, we can check the solution of the Einstein equations in the [50] Newtonian limit, because the new theory should agree with the well-tested Newtonian mechanics. [51] For that purpose, it makes sense to look at radial free fall in the Schwarzschild spacetime for $r \gg |C|$. Radial free fall is a geodesic curve of the form

$$\gamma = \begin{pmatrix} \gamma^t \\ \gamma^r \\ \gamma^\theta \\ \gamma^\phi \end{pmatrix} = \begin{pmatrix} t \\ r \\ \theta_0 \\ \phi_0 \end{pmatrix}$$

Where θ_0 and ϕ_0 are constants. The geodesic equation in coordinates is

$$\frac{d^2\gamma^\mu}{d\tau^2} + \Gamma^\mu_{\alpha\beta}\frac{d\gamma^\alpha}{d\tau}\frac{d\gamma^\beta}{d\tau} = 0$$

In the case of radial free fall, only $\frac{d\gamma^r}{d\tau}$ and $\frac{d\gamma^t}{d\tau}$ are $\neq 0$. Thus, the geodesic equation for radial free fall is

$$\frac{d^2r}{d\tau^2} + \Gamma^r_{tt}\left(\frac{dt}{d\tau}\right)^2 = 0$$

[49] Ibid p. 124
[50] (Carroll, 1997) p. 104
[51] (Wald, 1984) p. 124

[52] If we also assume that $\frac{dt}{d\tau} \gg \frac{dr}{d\tau}$. Calculating the Christoffel symbol, one gets

$$\Gamma^r_{tt} = \frac{1}{2}\left(g^{-1}\right)^{r\alpha}\left(\frac{\partial g_{t\alpha}}{\partial t} + \frac{\partial g_{\alpha t}}{\partial t} - \frac{\partial g_{tt}}{\partial x^\alpha}\right)$$

$$= -\frac{1}{2}\left(g^{-1}\right)^{rr}\frac{\partial g_{tt}}{\partial r} = -\frac{1}{2}f(f')$$

$$= \frac{C}{2r^2}\left(1 + \frac{C}{r}\right) \approx \frac{C}{2r^2}$$

For r large enough, the radial geodesic equation gives

$$\frac{d^2r}{dt^2} \approx -\frac{C}{2r^2}$$

While Newtonian mechanics gives

$$\frac{d^2r}{dt^2} = -\frac{GM}{r^2}$$

With M as the mass of the object and G as the gravitational constant. [53] Thus, for both theories to agree, it must hold that

$$C = -2MG$$

In natural units, one sets $G = 1$. And finally, the Schwarzschild metric (hereafter SM) is

$$\therefore g = -\left(1 - \frac{2M}{r}\right)dt^2 + \left(1 - \frac{2M}{r}\right)^{-1}dr^2 + r^2 d\Omega^2 \qquad \blacksquare$$

Thus, it has been shown how the Schwarzschild solution emerges directly as a solution to Einstein's field equations. This connects theoretical physics with the geometric description of how spacetime curves outside a spherical mass and provides a precise mathematical model for black holes.

[52] Ibid p. 124
[53] (Gustavo E. Romero, 2014) p. 36

3.2 Derivation of the Schwarzschild Radius

Definition: The Schwarzschild radius

[a] The Schwarzschild radius (r_S) is defined as the critical radius around a spherically symmetric mass M. The surface defined by $r = r_S$ is called the event horizon. It is characterized by having a coordinate singularity where a term goes toward 0.

$$\frac{2GM}{c^2} = r_S$$

Or when $G = c = 1$:

$$2GM = r_S$$

[a](Piotr T. Chruściel, 2012)

In the metric, the term $\left(1 - \frac{2M}{r}\right)$ appears twice. It is this term that determines how time and space behave. Besides the singularity at $r = 0$, the Schwarzschild metric has a division in coordinates at $r_S = 2M$, which is called the Schwarzschild radius (hereafter SR). Restoring units leads to the value:

$$r_S = \frac{2GM}{c^2} \approx 3\left(\frac{M}{M_\odot}\right) \text{km}$$

Where $M_\odot$ is the mass of the sun, also called solar mass. So for normal bodies, the SR lies inside the body, where the coordinates for the exterior solution are not valid. It therefore has no relevance. But if the body's mass is compressed enough, r_S lies outside the body, and we have a black hole. SR is then the black hole's event horizon.[54] At the proper time, we get (when we do not set $G = 1$):

$$d\tau = \left(1 - \frac{2GM}{rc^2}\right)^{\frac{1}{2}} dt$$

Or:

$$dt = \left(1 - \frac{2GM}{rc^2}\right)^{-\frac{1}{2}} d\tau$$

When we let $r \to \infty$, we see that both times agree, so t is interpreted as the proper time measured from an infinite distance. When the system with proper time τ approaches r_S, dt tends toward infinity according to the equation (no. 2 for

[54](Gustavo E. Romero, 2014) p. 37

proper time). [55] The object never reaches the Schwarzschild surface when viewed by an infinitely distant observer. The closer the object is to SR, the slower it moves for the external observer.A direct consequence of the difference that gravity introduces in the local time relative to the time at infinity is that radiation escaping from a given radius $r > r_S$ will be redshifted when received by a distant and static observer. [56] Since the photon's frequency (and thus its energy) depends on the time interval, we can write based on the equation (no. 2 for proper time):

$$\lambda_\infty = \left(1 - \frac{2GM}{rc^2}\right)^{-\frac{1}{2}} \lambda$$

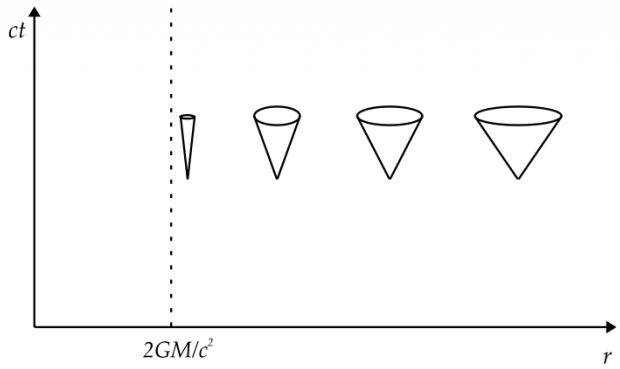

And since the redshift is

$$z = \frac{\lambda_\infty - \lambda}{\lambda}$$

Then

$$1 + z = \left(1 - \frac{2GM}{rc^2}\right)^{-\frac{1}{2}}$$

When $r \to r_S$, the redshift becomes infinite. This means that a photon needs infinite energy to escape from the region determined by r_S. [57] Events occurring at $r < r_S$ are decoupled from the rest of the universe. Therefore, we call the surface determined by $r = r_S$ an event horizon.[58] The appendix shows a spacetime diagram in Schwarzschild coordinates, which illustrates the light cones for events at various distances from the event horizon.In the appendix above, one sees what happens to the light cones when an event is closer to the horizon of a Schwarzschild black

[55](Pedersen, 2008) pp. 57-58
[56](Gustavo E. Romero, 2014) p. 38
[57](Gustavo E. Romero, 2014) p. 38
[58]Appendix no. 2

hole. The shape of the cones can be calculated from the metric, setting the null condition $ds^2 = 0$:

$$\frac{dr}{dt} = \pm\left(1 - \frac{2GM}{r}\right)$$

[59] Here, one lets $c = 1$. When $r \to \infty$, $\frac{dr}{dt} \to \pm 1$, as in Minkowski spacetime. To find the event horizon (r_S), one must find the surface where the coordinate velocity of light falls to zero:

$$\lim_{r \to r_S} \frac{dr}{dt} = 0$$

Now the velocity equation is substituted in:

$$\lim_{r \to r_S} \pm\left(1 - \frac{2GM}{r}\right) = 0$$

Since the expression is continuous at r_S (provided that $r_S \neq 0$), the limit can be calculated directly by replacing r with r_S:

$$1 - \frac{2GM}{r_S} = 0$$

$$\therefore 2GM = r_S \qquad \blacksquare$$

[60] Since the SR represents the critical boundary of the black hole, beyond which information is lost, one can begin to investigate what occurs before the boundary is reached—where the curvature of spacetime is not extreme enough to stop particles moving at the speed of light, but still sufficient to [61] alter other physical effects.

3.3 Gravitational time dilation

Gravitational time dilation is crucial to examine, as time changes so drastically just outside the boundary. [62] To understand this, one must look directly at the time component of the metric $g_{tt} = \left(1 - \frac{2GM}{rc^2}\right)$, where the constants are not set to 1. [63] The component describes the relationship between the coordinate time (t), measured by an observer very far away from the black hole, and the proper time (τ), which is the time that actually elapses on a clock for an observer situated at a fixed distance r close to the mass.

$$d\tau^2 = \left(1 - \frac{2GM}{rc^2}\right) dt^2 \iff d\tau = \sqrt{\left(1 - \frac{2GM}{rc^2}\right)} dt$$

[59] (Gustavo E. Romero, 2014) p. 38
[60] (Hamilton A. J., 2021) p. 137
[61] Ibid. p. 18
[62] Ibid
[63] (Tong, 2019) p. 24

[64] When an asymptotic observer at $r \to \infty$ measures time t, an observer at distance r will measure time $d\tau$. A local observer near a black hole will measure their own time τ as normal without any change, in accordance with the equivalence principle. However, the local observer will perceive the rest of the universe to be violently accelerated. [65] An asymptotic observer at $r \to \infty$ will experience time much faster in relative terms, but still normally without any change, also according to the equivalence principle. For this observer, the clock of the local person near the black hole will appear to move slower and slower. In the event that the local observer approaches the SR, they will, from the perspective of the outside observer, appear to come to a halt—essentially becoming 'frozen in time.'

3.4 Spaghettification

The local observer approaching the SR will simultaneously experience strong gravitational forces pulling them into the black hole. [66] This force is the tidal force, which begins to stretch them. Beyond these forces pulling on the local observer, the tidal force from a black hole is so powerful that if a star passes the hole, it will be subjected to the same effect. [67] 'Tidal disruption event' is the term for the situation that arises when a star passes so close to a supermassive black hole that it is pulled apart by the black hole's tidal force. It is here that the star is subjected

[64] Ibid
[65] Ibid
[66] (Woodhouse, 2007) - p. 89
[67] (Daniel J. Price, 2024)

to spaghettification, producing a tidal stream of material that loops around the black hole. [68] This process can be explained via the geodesic deviation:

$$\frac{D^2\zeta^\mu}{d\tau^2} = R^\mu_{v\rho\sigma} u^v u^\rho \zeta^\sigma$$

Where ζ^μ, ζ^σ is the separation vector connecting two points on a star. $u^v u^\rho$ describes the star's direction and speed through this four-dimensional spacetime. $\frac{D^2}{d\tau^2}$ is the covariant acceleration. This acceleration is what overcomes the star's own gravity and creates the spaghettification. The Riemann curvature tensor ($R^\mu_{v\rho\sigma}$) is the decisive factor representing the curvature of spacetime and dictating how violently the star is stretched. The front of the star will thus accelerate faster toward the black hole than its back, because space stretches more the closer one gets to the singularity. The star loses its cohesive strength and is transformed into a long, thin stream of gas, as illustrated in [69] the appendix.

3.5 Determination of the mass of Sagittarius A*

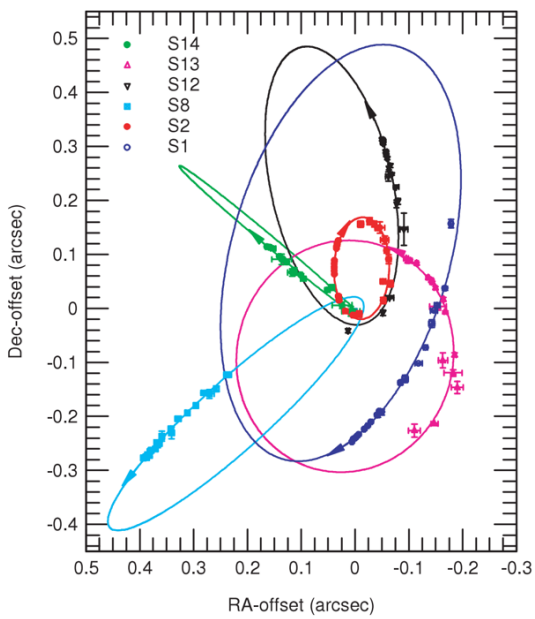

To assess the magnitude of the Riemann curvature tensor, it is crucial to know the mass of the black hole, as this mass serves as the primary source of spacetime

[68] (Rubio, 2015) p. 66
[69] Appendix no. 3

curvature in the object's vicinity. Stars orbiting the center of the Milky Way provide evidence for the existence of a supermassive black hole. This black hole is known as Sagittarius A* (Sgr A*). To estimate its mass, one must observe the stars orbiting Sgr A*; here, [70] Kepler's third law is applied:

$$\frac{GMt^2}{(2\pi)^2} = r^3 \iff M = \frac{4\pi^2 r^3}{Gt^2}$$

Where t is the orbital period, G is the gravitational constant, M is the mass of the central body, and r is the average orbital radius between the orbiting object and the central mass. [71] The appendix shows the orbits of six stars around Sgr A*. [72] The data from these stars has been determined:

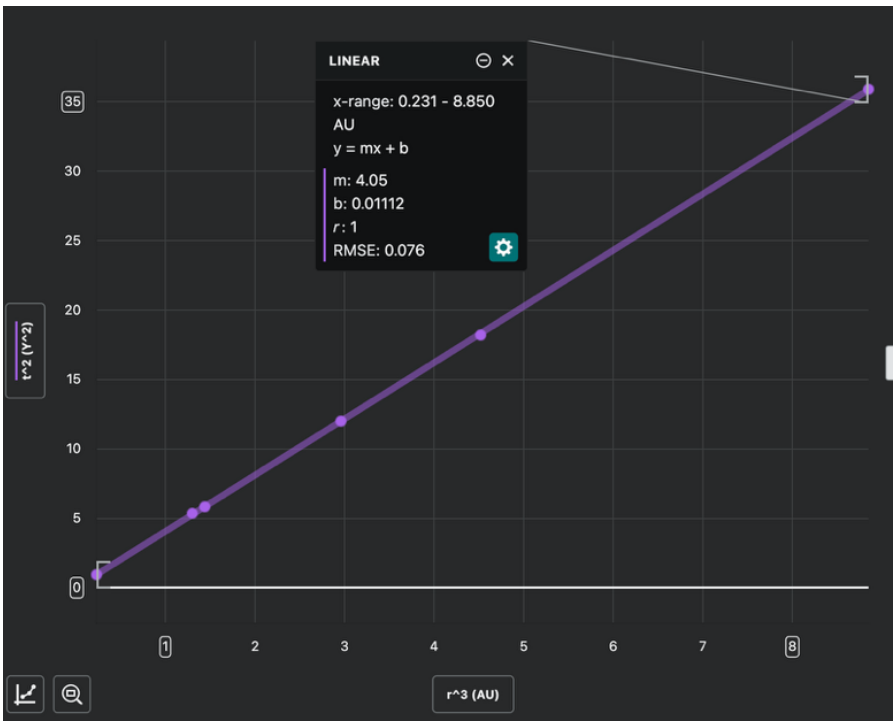

Parameter[a]	S1	S2	S8	S12	S13	S14
a (arcsec).....	0.412 ± 0.024	0.1226 ± 0.0025	0.329 ± 0.018	0.286 ± 0.012	0.219 ± 0.058	0.225 ± 0.022
e.....	0.358 ± 0.036	0.8760 ± 0.0072	0.927 ± 0.019	0.9020 ± 0.0047	0.395 ± 0.032	0.9389 ± 0.0078
P (yr)	94.1 ± 9.0	15.24 ± 0.36	67.2 ± 5.5	54.4 ± 3.5	36 ± 15	38.0 ± 5.7

The focus is placed solely on P and a, where $P \equiv t$ and $a \equiv r$. To determine the mass, a regression analysis is performed. To simplify the calculations, the

[70] (Hamilton A., 2006)
[71] Appendix no. 4
[72] (F. Eisenhauer, 2005) + appendix no. 5

period can be measured in years, the average orbital radius in AU, and the mass of the central body in solar masses. This implies that $\frac{4\pi^2}{G} = 1$, whereby Kepler's third law is simplified to $M = \frac{r^3}{t^2}$. Based on the [73] linear regression, the mass is obtained as the slope, which equals 4.05 with a factor of 10^6. This indicates that the mass of Sgr A* is:

$$M_{Sgr\ A*} \approx 4.05 \cdot 10^6 M_\odot$$

[73] Appendix no. 6

4 Assessment and Discussion

4.1 Assessment of the Schwarzschild Solution and the Mass of Sgr A*

The Schwarzschild Solution (SL) stands as a breakthrough in General Relativity (GR), as it was the first exact solution to Einstein's field equations. By assuming static equilibrium and spherical symmetry in a vacuum ($T_{\mu v} = 0$), a unique description of spacetime is enforced. A theoretical property of this solution is [74] Birkhoff's theorem, which states that any spherically symmetric source must necessarily produce the Schwarzschild metric in the exterior vacuum. This means the model is universally applicable to all non-rotating, spherical masses, which in this context applies to all such black holes.[75] However, SL has limitations in the form of its two singularities:The coordinate singularity: Occurs at $r = r_S$ in the term $\left(1 - \frac{2GM}{rc^2}\right)$, where the components diverge at the Schwarzschild radius (SR). This limitation is not due to physical reality but is a mathematical artifact of the chosen coordinates. For an infalling observer, the crossing of the event horizon is continuous, while for an external observer, it appears as a point where time stands still ($dt \to \infty$).The physical singularity: Located at $r = 0$, this is a true physical boundary. Here, the curvature tensor diverges toward infinity, and General Relativity breaks down.[76] SL remains an idealization. Since most black holes are formed from collapsing stars with angular momentum, they will, in reality, rotate. [77] Consequently, SL is insufficient as it does not account for effects like "frame-dragging", which requires the more complex Kerr metric. [78] Roy Kerr published his solution to Einstein's field equations in 1963, which finally took rotation into account.Regarding the mass determination of Sagittarius A*, the calculated value of $4.05 \cdot 10^6 M_\odot$ is remarkably close to the internationally recognized estimates (often cited around 4.1 to 4.3 million solar masses). Using Kepler's laws for these stars is a valid approximation because the stars are sufficiently far from the event horizon that relativistic corrections to their orbits are minimal, allowing Newtonian mechanics to provide a highly accurate estimate of the central mass.

$$ds^2 = g_{tt}dt^2 + 2g_{t\phi}dtd\phi - g_{\phi\phi}d\phi^2 - \Sigma\Delta^{-1}dr^2 - \Sigma d\theta^2$$

[79] The Kerr metric describes the spacetime around a rotating, massive object and is expressed in Boyer-Lindquist coordinates, which differ from those used for

[74](Gustavo E. Romero, 2014) - pp. 40-41
[75](Daniel Grumiller, 2022) - p. 30
[76]Ibid. p. 15
[77]Ibid. pp. 59-62
[78](Gustavo E. Romero, 2014) p. 49
[79]Ibid

SL. [80] One difference from the static SL is the introduction of the spin parameter $a = \frac{J}{M}$, representing the object's angular momentum per unit mass. When the object rotates ($a \neq 0$), it means the metric is no longer spherically symmetric but is instead axially symmetric.[81] The effect of rotation is minimal at the large distances where the stars move. Therefore, one can simplify the model to the Schwarzschild metric here and use classical celestial mechanics to find the mass.[82] The determination of the mass of Sgr A* has been vital in proving the existence of black holes. By applying Kepler's third law to the observed stellar orbits in the center of the galaxy, the mass is determined to be:

$$M_{Sgr\ A*} \approx 4.05 \cdot 10^6 M_\odot$$

This value is of great significance, as it places an enormous mass within an extremely small volume. The SR for such a mass is:

$$\begin{aligned} r_S &= \frac{2GM}{c^2} \\ &= \frac{2 \cdot \left(6.6743 \cdot 10^{-11}\ \mathrm{m^3 kg^{-1} s^{-2}}\right) \cdot (4.05 \cdot 10^6 \cdot 2 \cdot 10^{30}\ \mathrm{kg})}{\left(3 \cdot 10^8 \frac{\mathrm{m}}{\mathrm{s}}\right)^2} \\ &\approx 12\,013\,700\,000\ \mathrm{m} \\ &= 12\,013\,700\ \mathrm{km} \end{aligned}$$

When looking at this radius together with the orbits of the stars, one can conclude that the mass density is so high that no other known physical structure than a black hole can exist at the center. The result thus confirms that the mathematical derivation of SL is not merely theoretical but describes a physical object in reality.

4.2 Discussion

The discussion of the event horizon inevitably leads to the question of causality. When a particle crosses r_S, the sign of the time component (g_{tt}) and the radial component (g_{rr}) in the metric flips. [83] This shows that the coordinate r changes character from being a spatial dimension to being a temporal dimension. Inside the horizon, movement toward smaller r is therefore just as inevitable as movement forward in time. All light-like geodesics and timelike geodesics point inevitably

[80] Ibid
[81] Ibid
[82] (Anna Ciurlo, 2025) p. 7
[83] (Carroll, 1997) p. 185

toward the singularity. This makes the black hole a causal trap, in that information cannot escape because there are no paths in spacetime that lead away from the center.[84] The loss of information (the information paradox) remains one of the most debated topics in modern theoretical physics, as it challenges the quantum mechanical principle of unitarity.

In the derivation of SL, it is assumed that spacetime is static and spherically symmetric. This is a useful idealization, supported by [85] Birkhoff's theorem, which dictates that any spherical mass in a vacuum will produce the Schwarzschild metric in the exterior empty space. However, collapsing stars almost always possess angular momentum in the real universe. [86] This is where SL becomes insufficient and must therefore be replaced with the Kerr metric. This is where 'frame-dragging' is introduced, where spacetime itself is "swirled" around the mass.The mass of Sgr A* was found to be $M_{Sgr\ A*} \approx 4.05 \cdot 10^6 M_\odot$, which is a valid estimate via Kepler's third law; however, one must acknowledge that this result relies on the Newtonian limit ($r \gg r_S$). [87] To obtain a complete description of Sgr A*, one must account for the object's rotation, which affects the Innermost Stable Circular Orbits (ISCO) for the material forming the accretion disk.Observations of the stars orbiting Sgr A*—specifically [88] S2, as its orbit is so close to Sgr A*—have allowed for the [89] measurement of the relativistic precession of its perihelion via Schwarzschild Precession (SP). While Newton predicts a perfectly closed orbit, SL dictates that the ellipse will rotate slightly with each revolution. [90] The relativistic angular change per orbit $\Delta\phi$ is given by:

$$\Delta\phi \approx \frac{6\pi GM}{c^2 a(1-e^2)}$$

Where a is the semi-major axis and e is the eccentricity of the orbit. [91] By demonstrating this precession in S2, it is confirmed that the observed mass is not just a dense concentration of dark matter, but an object—in this case, a black hole—that curves spacetime in precise accordance with the geodesic equations.The analysis of spaghettification via the geodesic deviation equation shows how curvature manifests as a concrete mechanical influence. For a supermassive black hole like Sgr A*, the tidal forces at the event horizon are paradoxically weaker than for a smaller black hole, as r_S is much larger and the curvature is therefore more "smoothed

[84](Darwish, 2023)
[85](Gustavo E. Romero, 2014) pp. 40-41
[86](Daniel Grumiller, 2022) p. 59
[87](Gourgoulhon, 2026) p. 226
[88](F. Eisenhauer, 2005)
[89](Tong, 2019) p. 37
[90](Ali-Haïmoud, 2018) p. 5
[91](Kristensen, 2022) p. 36

out." This means that an observer could, in theory, cross the horizon of Sgr A* without being immediately spaghettified, whereas this would happen long before the horizon of a black hole with one solar mass.This also highlights the important relationship between the total mass M and the local curvature depending on r. [92] The tidal force F_{tidal} is proportional to the mass but decreases with the third power of the distance, $1/r^3$. Since the Schwarzschild radius r_S grows linearly with mass ($r_S \propto M$), the tidal force at the horizon itself is actually proportional to $1/M^2$. This explains why one can pass the horizon of Sgr A* without significant spaghettification, while at a one-solar-mass black hole, one would be torn apart by the curvature long before reaching r_S.[93] Although SL is a model that appears perfect, it ignores rotation and electric charge. However, it has proven its precision in theoretical predictions and observed stellar orbits, such as with S2. SL thus functions as a bridge between mathematical understanding and real-world observations.

[92](Pinochet, 2022) p. 6
[93](Gustavo E. Romero, 2014)

5 Conclusion

This assignment has examined the Schwarzschild solution, which is one of the fundamental tools for understanding static, spherically symmetric black holes. Through the mathematical derivation, it has been demonstrated how Karl Schwarzschild showed that Einstein's field equations in a vacuum lead to a geometry where space and time are tightly interwoven and dependent on the central mass M. One of the central solutions found in the assignment is the definition of the event horizon at the Schwarzschild radius $r_S = \frac{2GM}{c^2}$ or $r_S = 2M$. It has been shown here that the horizon is not just a physical barrier but a causal boundary where the coordinate velocity of light falls to zero, and where temporal and radial coordinates swap roles. This explains why information loss is an inevitable consequence of the Schwarzschild solution, as all future geodesics within r_S point toward the singularity at $r = 0$.The analysis of physical effects near the horizon, such as gravitational time dilation, illustrates the contrasts between the experiences of a local and a distant observer. The investigation of tidal forces and spaghettification has revealed the fact that supermassive black holes have a smaller F_{tidal} at the horizon itself compared to smaller black holes, as the curvature is more smoothly distributed over a larger area. By applying the theory to observational data of stars orbiting the object at the center of the Milky Way, the mass of Sagittarius A* has been determined to be approximately $M_{Sgr\ A*} \approx 4.05 \cdot 10^6 M_\odot$, while simultaneously proving that a black hole exists at the center of the Milky Way.The Schwarzschild precession in S2's orbit was used as evidence that the Schwarzschild solution is not merely a mathematical idea but a concept that can be used to describe reality. Although the Schwarzschild solution has its limitations by ignoring rotation (which requires the Kerr metric), it still serves as a bridge between Einstein's general theory of relativity and our observational knowledge of the universe's black holes. The assignment has thus shown that black holes are the most extreme expression of spacetime geometry, where mathematics dictates the ultimate limits of physics.

References

[1] Ali-Haïmoud, Y. (2018). *General Relativity Fall 2018 Lecture 22: Timelike geodesics of Schwarzschild*. Retrieved from cosmo.nyu.edu.

[2] Anna Ciurlo, M. R. (2025, marts 25). *Sagittarius A* - The Milky Way Supermassive Black Hole*. Retrieved from arxiv.

[3] Carroll, S. M. (1997, December 3). *Lecture Notes on General Relativity*. Retrieved from arxiv.

[4] Daniel Grumiller, M. M.-J. (2022). *Black Hole Physics*. Springer.

[5] Daniel J. Price, D. L. (2024, August 20). *Eddington Envelopes: The Fate of Stars on Parabolic Orbits Tidally Disrupted by Supermassive Black Holes*. Retrieved from The Astrophysical Journal Letters.

[6] Darwish, D. A. (2023, Juni 15). *Introduction to Hawking Radiation and the Black Hole Information Paradox*. Retrieved from cern.

[7] Einstein, A. (1916). *THE FOUNDATION OF THE GENERAL THEORY OF RELATIVITY*. Retrieved from isidore.co.

[8] F. Eisenhauer, R. G.-P. (2005). *SINFONI in the Galactic Center: Young Stars and Infrared Flares in the Central Light-Month**. Retrieved from The Astrophysical Journal.

[9] Gourgoulhon, É. (2026, Januar 4). *Geometry and physics of black holes*. Retrieved from relativite.obspm.

[10] Gustavo E. Romero, G. S. (2014). *Introduction to Black Hole astrophysics*. Springer.

[11] Hamilton, A. (2006, Februar 28). *Orbiting the Black Hole*. Retrieved from jila.colorado.edu.

[12] Hamilton, A. J. (2021, December 4). *General Relativity, Black Holes, and Cosmology*. Retrieved from jila.colorado.edu.

[13] Jordi Gaset, A. M. (2022, Juni 23). *A variational derivation of the field equations of an action-dependent Einstein-Hilbert Lagrangian*. Retrieved from arxiv.

[14] Kristensen, C. C. (2022, Februar 25). *Investigation of the existence and expected mass of a companion black hole for Sagittarius A**. Retrieved from nbi.ku.dk.

[15] Pedersen, A. V. (2008). *Aspects of Black Hole Physics*. Retrieved from The Niels Bohr Institute.

[16] Pinochet, J. (2022, Februar 21). *The little robot, black holes, and spaghettification*. Retrieved from arxiv.

[17] Piotr T. Chruściel, J. L. (2012, Maj 29). *Stationary Black Holes: Uniqueness and Beyond*. Retrieved from Springer.

[18] Rubio, J. (2015, December). *TIDAL FORCES AND CURVATURE*. Retrieved from javierrubioblog.

[19] Schwarzschild, K. (1916, Januar 13). *On the gravitational field of a mass point according to Einstein's theory*. Retrieved from arxiv.

[20] T. M. Crispim, M. V.-C. (2025, Oktober 22). *Tidal Stretching and Compression in Black Bounce Backgrounds*. Retrieved from arxiv.

[21] Tong, D. (2019). *David Tong: Lectures on General Relativity*. Retrieved from damtp.cam.ac.uk.

[22] Wald, R. M. (1984). *General Relativity*. The University of Chicago Press.

[23] Woodhouse, N. (2007). *General Relativity*. Springer.

Appendix

Appendix no. 1

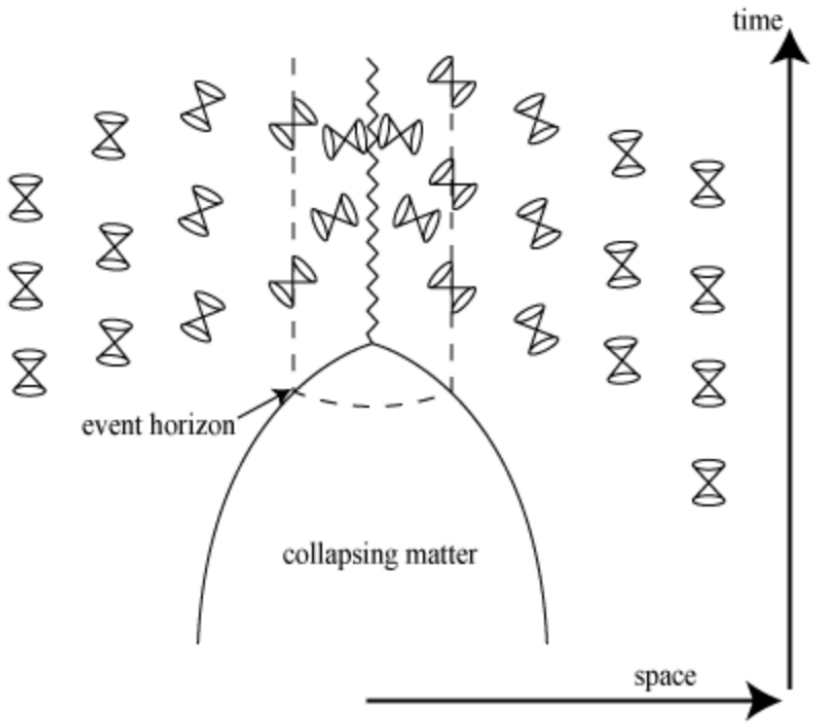

https://plato.stanford.edu/entries/spacetime-singularities/lightcone.html

Appendix no. 2

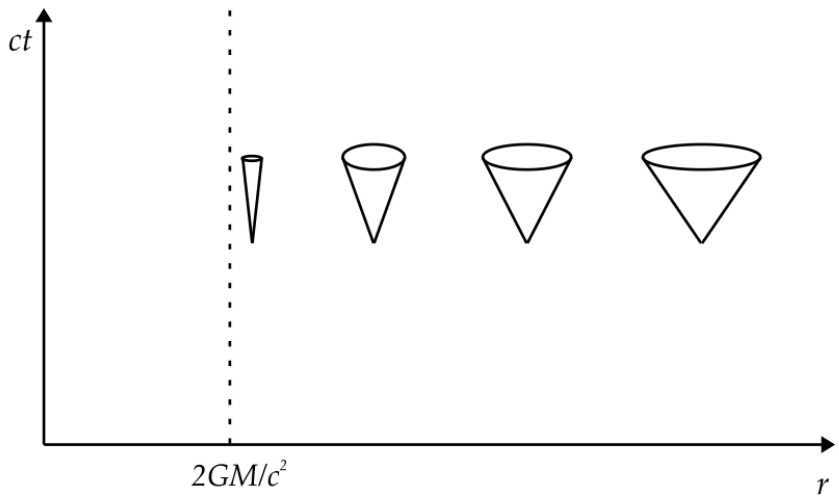

Appendix no. 3

https://science.nasa.gov/asset/hubble/black-hole-tidal-disruption-event/

Appendix no. 4 + 5

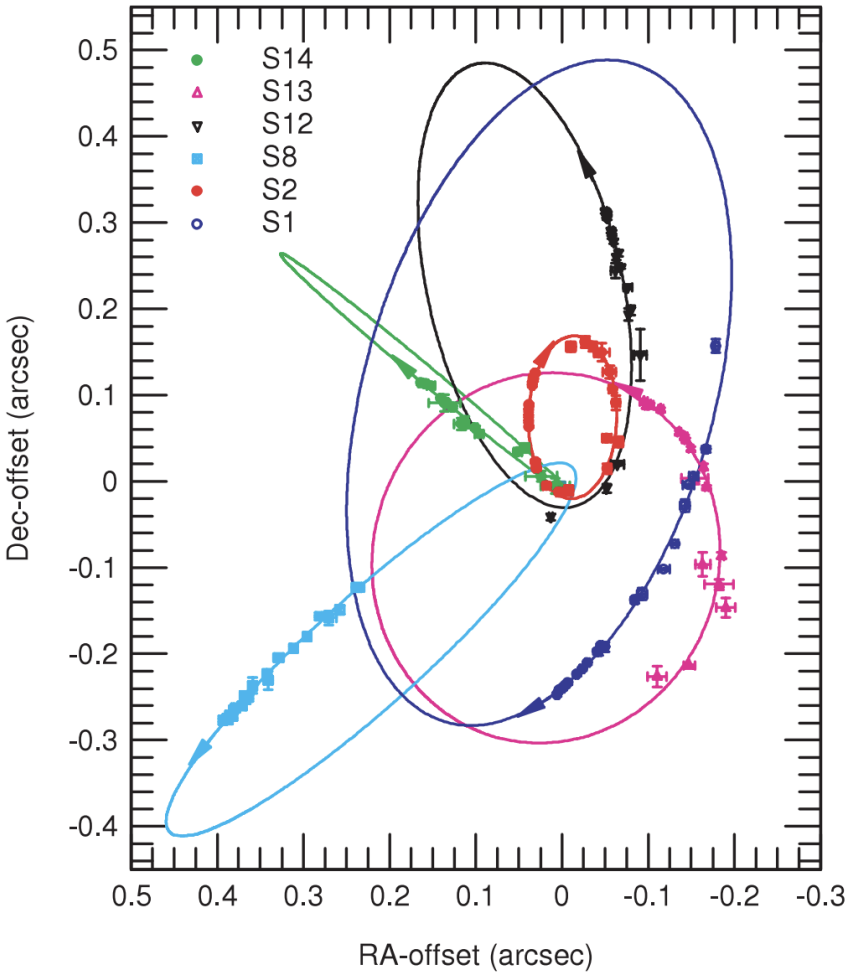

Parameter[a]	S1	S2	S8	S12	S13	S14
a (arcsec).....	0.412 ± 0.024	0.1226 ± 0.0025	0.329 ± 0.018	0.286 ± 0.012	0.219 ± 0.058	0.225 ± 0.022
e.....	0.358 ± 0.036	0.8760 ± 0.0072	0.927 ± 0.019	0.9020 ± 0.0047	0.395 ± 0.032	0.9389 ± 0.0078
P (yr)	94.1 ± 9.0	15.24 ± 0.36	67.2 ± 5.5	54.4 ± 3.5	36 ± 15	38.0 ± 5.7

https://iopscience.iop.org/article/10.1086/430667/pdf

Appendix no. 6

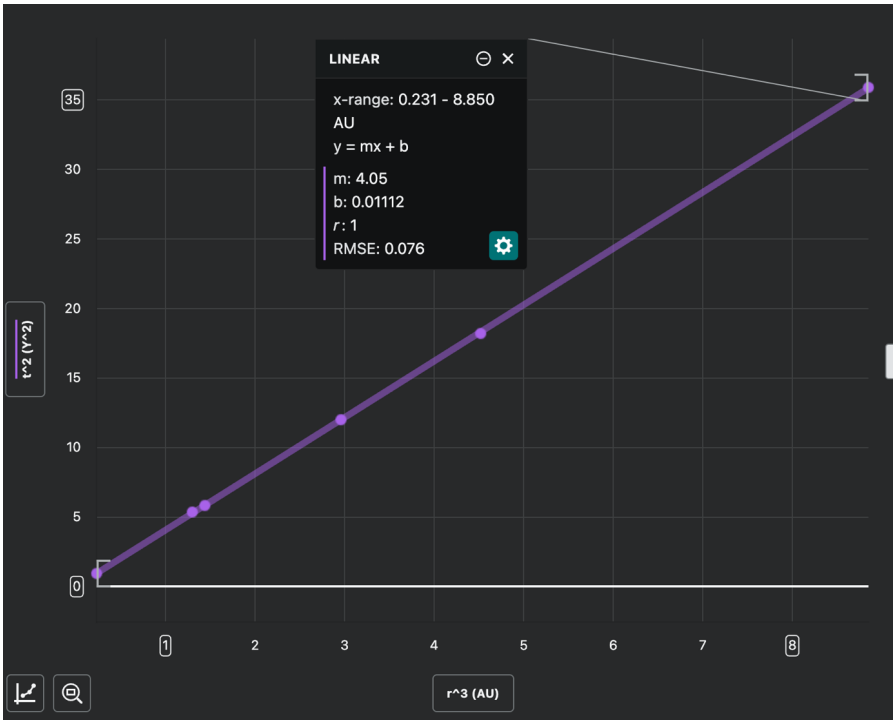

Appendix no. 7 - Acronyms

- **SR:** Schwarzschild radius
- **SL:** Schwarzschild solution
- **SM:** Schwarzschild metric
- **SP:** Schwarzschild precession
- **GR:** General Relativity
- **Sgr A*:** Sagittarius A*
- **ISCO:** Innermost Stable Circular Orbit
- **EH:** Einstein-Hilbert